PC Phone

PC Phone application is based on software technology, developed by Voipac, s.r.o. Company, that comes out from the most recent knowledge of the state of the art Voice over IP technology. PC Phone is H.323 compatible terminal equipment of VoIP network working under MS Windows operating system. It is fully interoperable with Voipac USB Phone.

PC Phone

Applications:

- Cost-effective international and long distance voice communication
- SOHO telephone services between offices, while using IP PBX
- Phone-PC and PC-Phone
- Combined voice and data services provided via ISP and ITSP
- Instant Messaging client (ICQ, Yahoo, AOL, Net Meeting...)

Benefits:

- Cost-effective long distance Internet telephone calls.
- Maximum flexibility in selection of Internet calls or PSTN calls.
- Simple terminal equipment either using private or public high-speed Internet access

Properties

- H.323 compatible PC Phone client, supporting interaction with Gatekeeper, H.245 Tunneling, Fast Start and H.245 in SETUP.
- Supported audio codecs: G.723.1, G.729A, GSM-6.10, MS-GSM, G.711-uLaw, G.711-ALaw, LPC-10.
- Automatic acceptance and diverting of incoming calls (Always / when engaged / if there is no response within user-defined time period).
- Software generated DTMF - optional.
- Intuitive, easy to configure graphical user interface with multiple user support.
- Support for all of installed sound cards.
- Silence detection & noise reduction.
- USB telephone set support: Silicon Portals NetPCphone, Zipcom Phone Set B4, Voipac USB Phone.
- Automatic connecting / disconnecting detection of the selected USB Phone Set.
- Multilingual support (CZ / DE / EN / FR / PL / SK).
- On-line displaying of credit / debit, call duration and call cost.
- Option to select from various application's skins.
- Phone number directory.
- Built-in Web-browser to access Voipac portal that allows searching for registered users, adding them to your address book, or to the list of ignored users, discover online / offline status of other subscribers logged into Voipac Gatekeeper and lots of additional information.
- Fast access dialing of frequently used numbers.

Supported OS

- Windows 98 SE / ME / 2000 / XP

Minimum HW configuration

- CPU Pentium 300 MHz
- 64 MB RAM
- USB port
- 10 MB disk free space
- OS MS Windows 98 SE/ME/2000/XP

Optimum HW configuration

- CPU Pentium 500 MHz
- 128 MB RAM
- USB port
- 50 MB disk free space
- OS MS Windows 2000

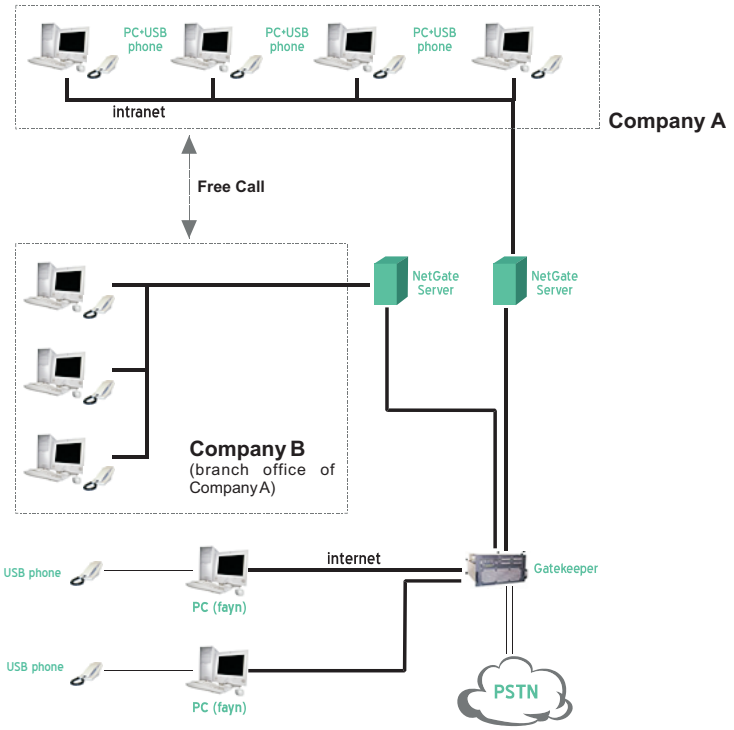

www.voipac.com

voipac

Voipac, s.r.o., Janka Kráľa 3
911 01 Trenčín, Slovak Republic
Phone: +421 32 653 85 55
Fax: +421 32 653 85 33
Email: info@voipac.com
Web: www.voipac.com